YINGJIAO®

YSD150S SERIES 150W



Yingjiao's step shape power family are designed with ultra-slim plastic housing and for full range AC input from 90V AC to 264V AC.
The series are isolation Class II Level, achieving high efficiency and low no-load power consumption. They provide adjustable DC output voltage and operate in wide temperature range.
The good performance can be used for building automation, household and industrial control systems etc.

Features

- Isolation Class II
- DC Output Voltage Adjustable
- Ultra Slim Step Shape
- Over Voltage Category II
- Protection:Short Circuit/Overload/ Over Voltage
- Three Years Warranty

Model Information

Yingjiao Part number	DC VOLTAGE	RATED CURRENT	RATED POWER
YSD150S-12	12V	11.3A 10.2A	135.6W/230V AC 122.4W/115V AC
YSD150S-15	15V	9.5A 8.55A	142.5W/230V AC 128.3W/115V AC
YSD150S-24	24V	6.25A 5.3A	150.0W/230V AC 127.4W/115V AC
YSD150S-48	48V	3.12A 2.72A	153.6W/230V AC 130.6W/115V AC

Input

VOLTAGE RANGE	90 ~ 264VAC	
	127 ~ 370VDC	
FREQUENCY RANGE	47~ 63Hz	
INRUSH CURRENT	COLD START 35A/115VAC 70A/230VAC	
AC CURRENT	3A/115VAC	
	1.6A/240VAC	
EFFICIENCY	89.0%	YSD150S-12
	89.5%	YSD150S-15
	90.5%	YSD150S-24
	90.5%	YSD150S-48

Output

RIPPLE & NOISE	100mVp-p	YSD150S-12
	120mVp-p	YSD150S-15
	150mVp-p	YSD150S-24
	200mVp-p	YSD150S-48
VOLTAGE ADJ. RANGE	10.8~13.8V	YSD150S-12
	13.5~18.0V	YSD150S-15
	21.6~29.0V	YSD150S-24
	43.2~55.2V	YSD150S-48
VOLTAGE TOLERANCE	±2.0%	YSD150S-12
	±2.0%	YSD150S-15
	±2.0%	YSD150S-24
	±2.0%	YSD150S-48
LINE REGULATION	±1.0%	
LOAD REGULATION	±1.0%	
SETUP, RISE TIME	500ms, 60ms/100-240VAC at full load	
HOLD UP TIME (Typ.)	30ms/230VAC, 12ms/115VAC at full load	

Protection

OVER LOAD	105 ~ 135% rated output power Hiccup mode when output voltage <50%, recovers automatically after fault condition is removed Constant current limiting within 50%~100% rated output voltage, recovers automatically after fault condition is removed	
OVER VOLTAGE	14.2~16.2V	YSD150S-12
	18.8~22.5V	YSD150S-15
	30.0~36.0V	YSD150S-24
	56.5~64.8V	YSD150S-48
	Protection type : Shut down o/p voltage, re-power on to recover	

Environment

WORKING TEMP.	-20℃ ～+70℃
Working Humidity	20 ~ 90% RH Non-Condensing
STORAGE TEMP., HUMIDITY	-40℃ ～+85℃, 10 ~ 95% RH non-condensing
TEMP. COEFFICIENT	±0.03%/℃ (0 ~ 50℃) RH non-condensing
VIBRATION	10 ~ 500Hz, 2G 10min./1cycle, period for 60min. each along X, Y, Z axes; Mounting: Compliance to IEC60068-2-6
OPERATING ALTITUDE	5000 meters
OVER VOLTAGE CATEGORY	II;According to EN62368-1;altitude up to 2000 meters
MTBF	500K hrs min. MIL-HDBK-217F (25℃)

SAFETY & EMC

SAFETY REGULATIONS	BS EN/EN62368-1
WITHSTAND VOLTAGE	I/P-O/P:4KVAC
INSULATION RESISTANCE	I/P-O/P:100M Ohms / 500VDC / 25℃ / 70% RH
EMC EMISSION	BS EN/EN 55032 class B, BS EN/EN IEC 61000-3-2,3
EMC IMMUNITY	BS EN/EN61000-4-2,3,4,5,6,8,11

Dimensions & Weight

Length:	105mm / 4.13in
Width:	90mm / 3.54in
Height:	58.4mm / 2.3in
Weight:	270g

Packing

Carton Size:	52.5 x 24.5 x 34.5CM 20.67x 9.65x 13.58 in
Master Carton Quantities:	50pcs / Carton

Dimensions and Installation

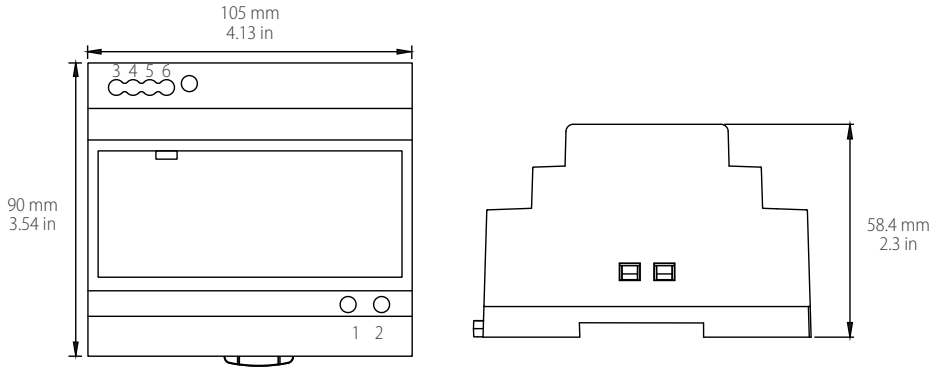

Input

No.	Description
1	AC/N
2	AC/L

Output

No.	Description
3,4	-V
5,6	+V

Functional Diagram

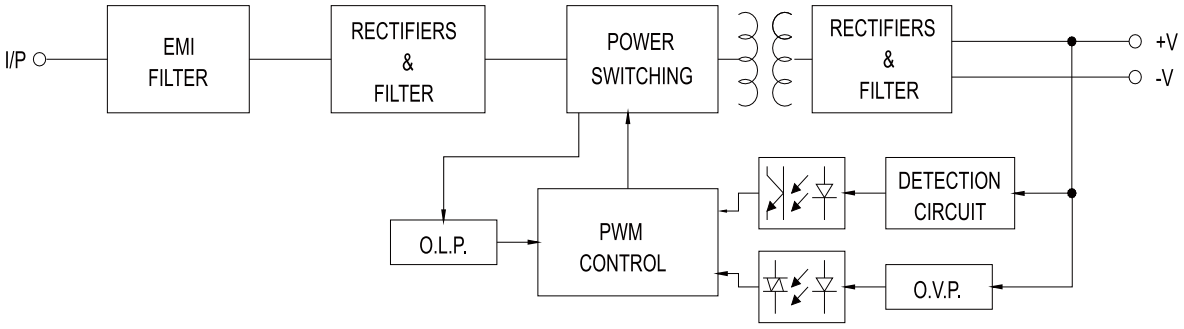

Deduction Curve and Temperature

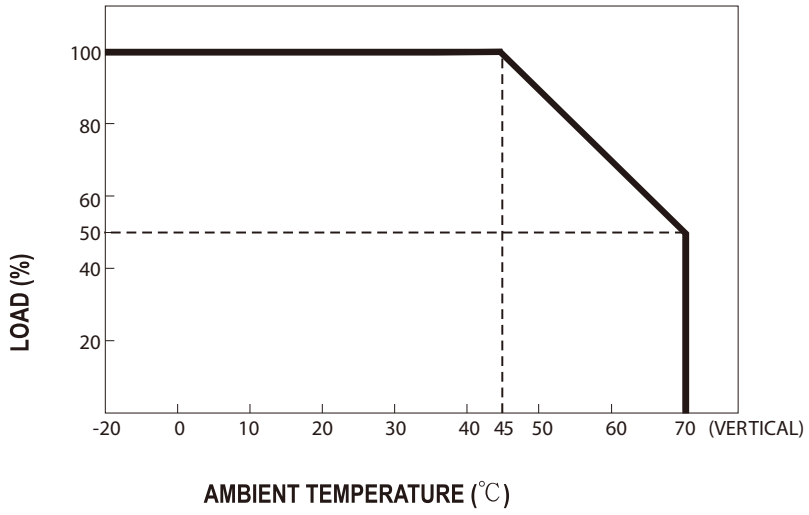

Minus Output and Input Voltage Curves

